5 HP CHAIN DRIVE TILLER w/o REVERSE
MODEL 23-5100G

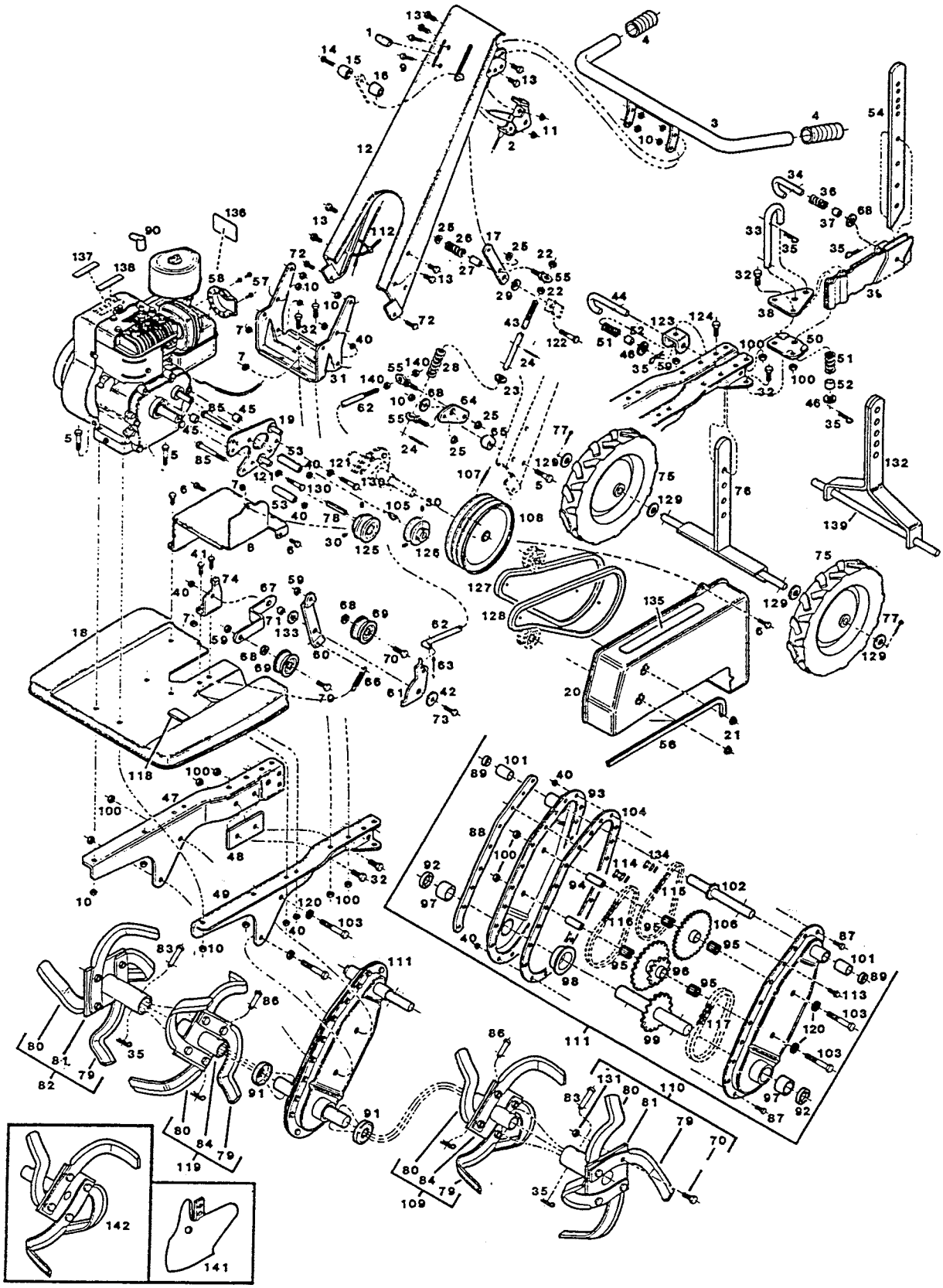

521880

5 HP CHAIN DRIVE TILLER w/o REVERSE
MODEL 23-5100G

Ref. No	Part No.	Description
1	744037	Knob—Throttle Control
2	781419	Control—Throttle w/Cable
3	590943	Handle Bar Assembly
4	751032	Grip—Handlebar
5	150250	Bolt—Hex 5/16-18 x 1-1/2
6	152660	Bolt—1/4-10 x 1/2
7	715037	Nut—1/4-20 Keps
8	570333	Cover—Handle
9	458687	Screw-Hex 10-24 x 1/2
10	715490	Nut—Hex 5/16-18
11	715334	Nut—Hex 10-24
12	570358	Handle Panel Assembly
13	450437	Bolt—Hex 5/16-18 x 5/8
14	458661	Bolt—Phillips 10-24 x 1-1/4
15	744086	Knob—Plain
16	744094	Knob—Threaded 10-24
17	422212	Lever Engagement
18	570374	Tine Hood Assembly
19	464180	Plate Assembly—Belt Guide
20	570341	Guard—Belt
21	715078	Nut—Hex 1/4-20 Whiz
22	452425	Nut—Hex 5/16-18
23	715185	Washer
24	489393	Pin—Roll 1/8 x 3/4
25	451419	Nut—Hex 1/4-20 Flange
26	775072	Spring—Engagement Lever
27	468801	Spacer—Spring
28	775080	Spring—Engagement Rod
29	715607	Washer—Belleville
30	458844	Set Screw
31	447011	Channel—Handle Support
32	458968	Bolt—Hex 3/8-16 x 1
33	488908	Pin—Pivot Depth Bracket
34	488932	Pin—Depth Bar Adj.
35	715011	Hair Pin
36	775247	Spring—Depth Bar Adj.
37	468090	Spacer—Depth Bar Adj.
38	463349	Plate—Top Depth Bracket
39	770891	Depth Bracket Assembly—Pivot
40	715508	Nut—Hex 1/4-20 Lock
41	715045	Bolt—Hex 1/4-20 x 3/4
42	462762	Washer-Flat 1-1/8 x .327 x .060
43	783985	Rod—Engagement Lever
44	488874	Pin—Adj. Wheel
45	468678	Spacer
46	461749	Washer
47	446955	Beam—Main Support R.H.
48	468058	Spacer—Main Support Beam
49	446930	Beam—Main Support L.H.
50	463364	Plate—Bottom Depth Bracket
51	775254	Spring—Wheel & Pivot Adj.
52	468108	Spacer—Wheel & Pivot Adj.
53	468686	Spacer—Belt Guide
54	435032	Bar-Depth
55	152876	Stud—Lever
56	447177	Rubber Strip
57	120048	Screw—Muffler Deflector
58	132142	Deflector—Muffler
59	715524	Nut—Hex 3/8-16 Jam
60	778431	Arm—Reverse
61	463323	Plate—Idler Pivot
62	530402	Rod—Control Idler
63	715029	Cotter Pin
64	530428	Bellcrank—Control Plate
65	468066	Spacer—Bellcrank
66	776807	Spring—Idler Return
67	557330	Arm—Forward Idler
68	461731	Washer—3/8 Flat
69	672923	Pulley Idler-Assembly
70	457176	Bolt—Hex 3/8-16 x 1-1/4
71	467829	Spacer—Pivot Plate
72	449587	Bolt—Hex 1/4-20 x 5/8
73	459909	Bolt—Hex 1/4-20 x 1
74	771006	Bracket—Idler Mounting
75	497826	Wheel—10 x 1.75 x 1/2
76	773085	Wheel Bracket Assembly
77	317016	Cotter Pin 1/8 x 1
78	446757	Key—Pulley
79	786475	Tine—Bolo, L.H.
80	786699	Tine—Bolo, R.H.
81	788117	Hub Assembly—Outer
82	570390	Tine Assembly—R.H. Outer
83	488825	Pin—Clevis 3/8 x2
84	788133	Hub Assembly—Inner
85	450007	Bolt—Hex 1/4-20 x 3-1/4
86	489823	Pin—Clevis 3/8 x 1-5/8
87	715052	Bolt—Hex 1/4-20 x 1/2
88	426015	Strap—Nut Plate
89	774695	Seal—Input Shaft ⅝" I.D.
90	110833	Cover—Spark Plug
91	762245	Cover—Tine Hub Seal
92	774547	Seal—Output Shaft 1" I.D.
93	432260	Transmission Half w/Bearings
94	432922	Sleeve
95	423434	Bearing—Sprocket
96	590000	Sprocket—Lower w/Bearings
97	423731	Bearing—Output Shaft
98	468033	Spacer—Tine Shaft
99	417501	Shaft—Output w/Sprocket
100	715441	Nut—Hex 3/8-16 Keps
101	423442	Bearing—Input Shaft
102	417469	Shaft—Input w/Sprocket
103	458927	Bolt—Hex 3/8-16 x 2-3/4
104	551151	Gasket—Transmission Housing
105	446773	Key—Woodruff
106	590018	Sprocket—Upper w/Bearings
107	314062	Pin—Roll 1/4 x 1-1/8
108	420919	Pulley Assembly—2 Groove
109	570408	Tine Assembly—L.H. Inner
110	570416	Tine Assembly—L.H. Outer
111	432310	Transmission Assembly
112	110379	Cable Tie
113	153601	Bolt—Hex 1/4-20 x 3/4
114	425124	Master Link No. 420
115	425314	Chain—Roller, No. 35
116	425421	Chain—Roller, No. 420
117	425348	Chain—Roller, No. 50
118	446799	Protective Pad
119	570382	Tine Assembly—R.H. Inner
120	461780	Washer—3/8 T-Lock
121	715094	Washer—1/4 Split Lock
122	450379	Bolt—Hex 1/4-20 x 1-3/4
123	447052	Channel—Wheel Adj.
124	458810	Bolt—Hex 3/8-16 x 5/8
125	420935	Forward Pulley
126	420927	Reverse Pulley
127	421339	Belt—Reverse
128	421321	Belt—Forward
129	151241	Washer
130	150433	Bolt—Hex 1/4-20 x 2
131	715086	Nut—3/8-16 Toplock
132	574780	Wheel Bracket
133	152553	Washer—Thrust 1/2 ID x .032 Hardened
134	424903	Master Link No. 35
135	551648	Decal—Caution
136	551655	Decal—Tine Warning
137	551713	Decal—Hand Placement
138	551846	Decal—Caution Disengage
139	557116	Axle—Wheel
140	310052	Nut—¼-20
		Optional Accessories
141	465823	Furrowing Kit
142	785758	Tine Extension
	432849	Gear Lube 8 oz. (not shown)