3 HP Chain Drive Tiller

5030B
(811-3763)

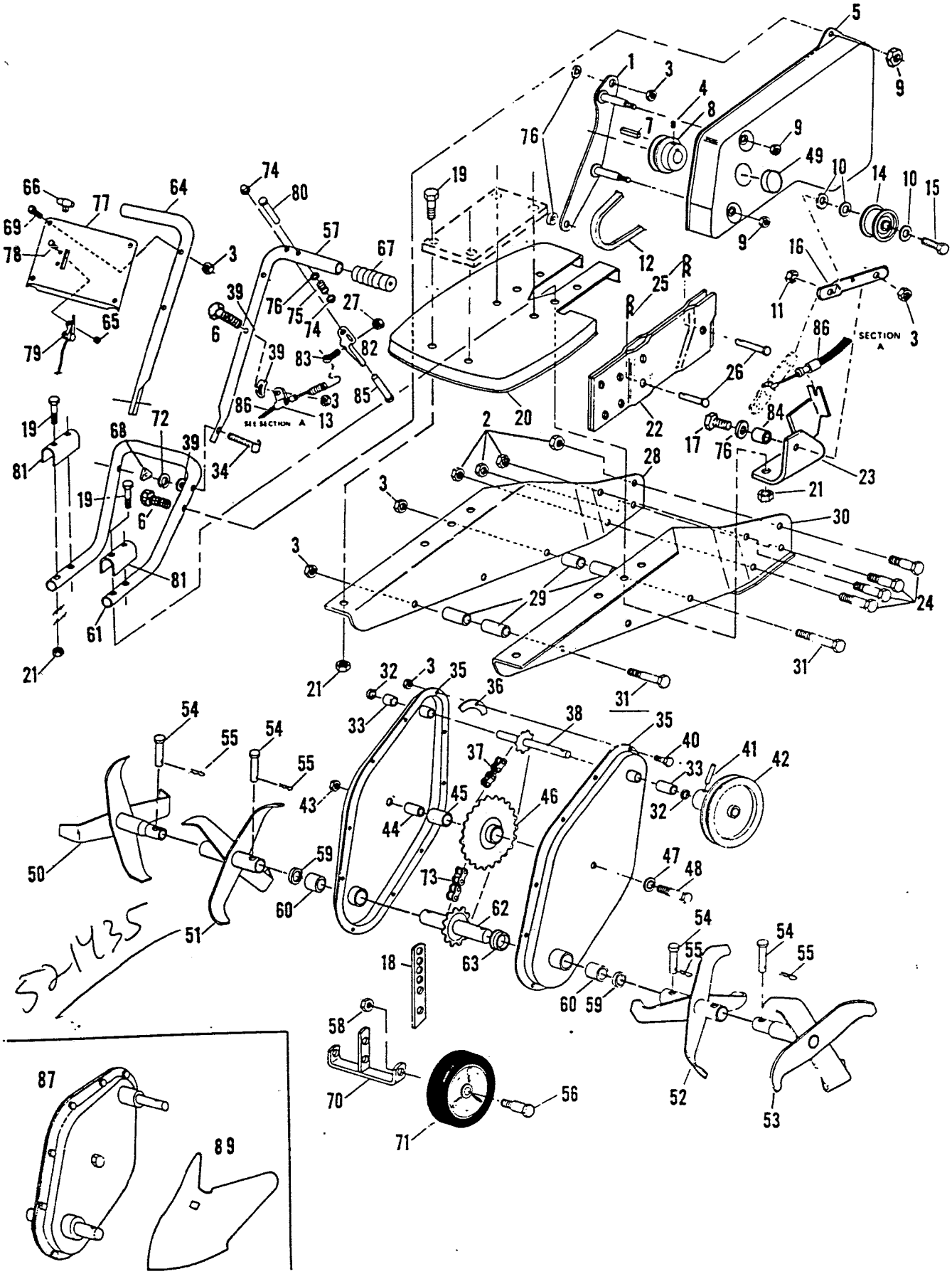

Parts List

Ref. No.	Part No.	Description
1	463687	Belt Guide Plate Assembly
2	452193	Nut — 5/16-18 Whizlock
3	715508	Nut — Hex 1/4-20 Locking
4	458844	Set Screw
5	570267	Belt Guard Assembly
6	450072	Bolt — 1/4-20 x 1-1/2
7	446369	Key — 3/16 Sq. x 1-1/4
8	420935	Pulley
9	715078	Nut — 1/4-20 Whizlock Flange
10	461731	Washer
11	715524	Nut — 3/8-16 Center Lock Jam
12	421321	Belt
13	447607	Clamp — Mounting
14	420745	Idler Pulley Assembly
15	715326	Bolt — 3/8-16 x 1 Hex Black
16	779165	Arm — Idler
17	715045	Bolt — 1/4-20 x 3/4 Hex
18	435289	Bar — Depth
19	460311	Bolt — Hex 5/16-18 x 1-3/4
20	570283	Hood — Tine
21	715490	Nut — 5/16-18 Lock
22	771576	Bracket Assembly — Depth Bar
23	772889	Bracket Assembly — Idler Mtg.
24	459131	Bolt — 5/16-18 x 1 Whizlock
25	715011	Hairpin — #3
26	489823	Pin — Clevis 3/8 x 1-5/8
27	452615	Nut — 1/4-20 Elastic
28	446914	Beam — Main Support, R.H.
29	468256	Spacer — Beam
30	446898	Beam — Main Support L.H.
31	150433	Bolt — Hex 1/4-20 x 2
32	774760	Seal — Oil, Input
33	423608	Bearing — Input Shaft
34	459727	Bolt — Curved Head
35	432377	Weld Assembly — Transmission
36	762039	Gasket — Transmission Housing
37	425389	Chain — Roller, No. 42
38	417691	Input Shaft Assembly
39	150201	Washer — Curved
40	715052	Bolt — 1/4-20 x 1/2 Hex
41	715193	Pin — Roll 3/16 x 1-1/4
42	419689	Pulley Assembly
43	715441	Nut — 3/8-16 Whizlock
44	432971	Sleeve — Bearing
45	423624	Bearing — Center Hub
46	434829	Sprocket & Hub Assembly
47	461780	Washer — 3/8 Dia. T-Lock
48	459032	Bolt — Hex 3/8-16 x 2-1/4
49	781625	Cup — Shaft Cover
50	786640	Tine & Hub Assembly — R.H. Outer
51	786582	Tine & Hub Assembly — R.H. Inner
52	786558	Tine & Hub Assembly — L.H. Inner
53	786616	Tine & Hub Assembly — L.H. Outer
54	488965	Pin — Clevis 5/16 x 1-1/4
55	490011	Hairpin
56	153668	Bolt — Shoulder
57	731703	Handle — L.H.
58	715086	Nut — 3/8-16 Lock
59	774737	Seal — Oil, Output
60	423632	Bearing — Output Shaft
61	763284	Yoke
62	417725	Output Shaft Assembly
63	468249	Spacer — Tine Shaft
64	731711	Handle — R.H.
65	715334	Nut — 10-24 Hex Keps
66	744227	Knob — Throttle Control
67	751032	Grip — Handle
68	744284	Knob — Plastic
69	449850	Bolt — Carriage 1/4-20 x 1-1/4
70	771600	Bracket Assembly — Wheel
71	498634	Wheel — 8"
72	461665	Washer — Lock
73	425397	Chain — Roller, No. 420
74	452128	Palnut — 1/4" Dia.
75	775130	Spring
76	460923	Washer — 1/4" Dia.
77	570275	Panel — Handle Bar
78	458687	Screw — 10-24 x 1/2 Hex Washer
79	780296	Control — Throttle
80	489013	Pin — Clevis 1/4" Dia. x 1-3/4
81	432963	Sleeve — Yoke Mounting
82	731695	Handle — Control
83	450478	Bolt — Spade
84	468728	Spacer — Idler Arm
85	489005	Pin — Clevis 1/4" Dia. x 1-1/2
86	749507	Cable — Control
87	432427	Transmission Assembly
88	110379	Tie-Cable
	OPTIONAL ACCESSORY	
89	465856	Furrowing Kit