3 HP Chain Drive Tiller
Model: 5030E

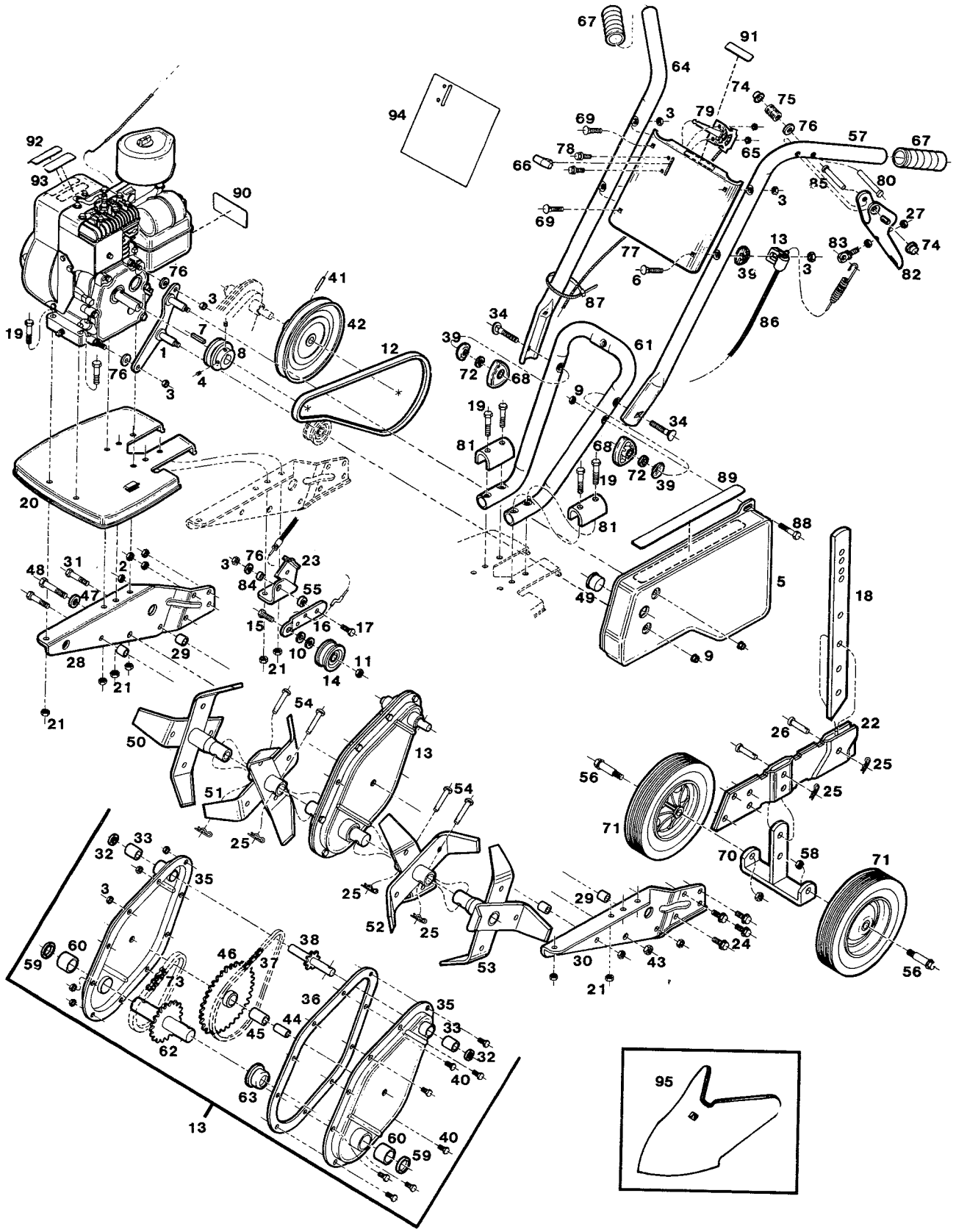

Ref. No.	JCPenney Part No.	Supplier Part No.	Description
1	1302-1928	463687	Belt Guide Plate Assembly
2	1286-8980	452193	Nut - 5/16-18 Whizlock
3	1304-5422	715508	Nut - Heax 1/4-20 Locking
4	1286-8998	458844	Set Screw
5	1001-2201	570267	Belt Guard Assembly
6	1230-6015	715532	Bolt - Carriage - 1/4-20 x 1-1/2
7	1286-8972	446369	Key - 3/16 Sq. x 1-1/4
8	1302-7248	420935	Pulley
9	1302-1951	715078	Nut - 1/4-20 Whizlock Flange
10	1300-2605	461731	Washer
11	1317-6748	715524	Nut - 3/8-16 Center Lock Jam
12	1286-1399	421321	Belt
13	1001-2375	447607	Clamp - Mounting
14	1072-5257	420745	Idler Pulley Assembly
15	1302-2066	715326	Bolt - 3/8-16 x 1 Hex Black
16	1297-6304	779165	Arm - Idler
17	1302-6000	715045	Bolt - 1/4-20 x 3/4 Hex
18	1302-2561	435289	Bar - Depth
19	1302-9939	460311	Bolt - Hex 5/16-18 x 1-3/4
20	1072-5307	570283	Hood - Tine
21	1302-1639	715490	Nut - 5/16-18 Lock
22	1302-2108	771576	Bracket Assembly - Depth Bar
23	1300-4882	772889	Bracket Assembly - Idler Mtg.
24	1302-2124	459131	Bolt - 5/16-18 x 1 Whizlock
25	1286-1670	715011	Hairpin - #3
26	1297-7658	489823	Pin - Clevis 3/8 x 1-5/8
27	1300-4890	452615	Nut - 1/4-20 Elastic
28	1304-0985	446997	Beam - Main Support, R.H.
29	1302-2157	468256	Spacer - Beam
30	1304-0936	446971	Beam - Main Support L.H.
31	1302-2173	150433	Bolt - Hex 1/4-20 x 2
32	1302-8881	774760	Seal - Oil, Input
33	1302-2199	423608	Bearing - Input Shaft
34	1244-0004	151936	Bolt - Curved Head
35	1072-7048	432377	Weld Assembly - Transmission
36	1302-2215	762039	Gasket - Transmission Housing
37	1302-2223	425389	Chain - Roller, No. 42
38	1302-2231	417691	Input Shaft Assembly
39	1286-1506	150201	Washer - Curved
40	1302-1597	715052	Bolt - 1/4-20 x 1/2 Hex
41	1300-2555	314096	Pin - Roll 3/16 x 1-1/4
42	1302-2249	419689	Pulley Assembly
43	1300-2944	715441	Nut - 3/8-16 Whizlock
44	1302-2256	432971	Sleeve - Bearing
45	1302-2264	423624	Bearing — Center Hub
46	1302-2272	434829	Sprocket & Hub Assembly
47	1302-2280	461780	Washer — 3/8 Dia. T-Lock
48	1286-1563	459032	Bolt — Hex 3/8-16 x 2-1/4
49	1304-0944	156190	Cup — Shaft Cover
50	1299-6633	786640	Tine & Hub Assembly - R.H. Outer
51	1304-9580	786582	Tine & Hub Assembly - R.H. Inner
52	1300-2688	786558	Tine & Hub Assembly - L.H. Inner
53	1300-2696	786616	Tine & Hub Assembly - L.H. Outer
54	1302-2314	488965	Pin — Clevis 5/16 x 1-1/4
55	1304-0951	156174	Spacer
56	1300-2886	153668	Bolt — Shoulder
57	1297-9316	731703	Handle - L.H.
58	1277-8320	715086	Nut — 3/8-16 Lock
59	1302-2181	774737	Seal — Oil, Output
60	1302-2348	423632	Bearing — Output Shaft
61	1304-0969	555912	Yoke
62	1302-2355	417725	Output Shaft Assembly
63	1302-2363	468249	Spacer — Tine Shaft
64	1302-2579	731711	Handle — R.H.
65	1317-6219	715334	Nut — 10-24 Hex Keps
66	1297-0513	744227	Knob — Throttle Control
67	1302-2637	751032	Grip — Handle
68	1300-1060	744284	Knob — Plastic
69	1302-2645	152363	Bolt — Carriage 1/4-20 x 1-1/4
70	1302-2413	771600	Bracket Assembly — Wheel
71	1277-7751	498634	Wheel — 8"
72	1297-6106	461665	Washer — Lock
73	1302-2439	425397	Chain — Roller, No. 420
74	1302-2447	452128	Palnut — 1/4" Dia.
75	1302-2454	775130	Spring
76	1302-1589	460923	Washer — 1/4" Dia.
77	1324-5741	574384	Panel — Handle Bar
78	1072-7469	458687	Screw—10-24 x 1/2 Hex Washer
79	1324-5758	530220	Control — Throttle
80	1302-2488	489013	Pin — Clevis 1/4" Dia. x 1-3/4
81	1302-2496	432963	Sleeve — Yoke Mounting
82	1302-2504	731695	Handle — Control
83	1302-2512	450478	Bolt — Spade
84	1244-0301	468728	Spacer — Idler Arm
85	1302-2538	489005	Pin — Clevis 1/4" Dia. x 1-1/2
86	1324-5766	530253	Cable — Control
87	1072-7550	432427	Transmission Assembly
88	1244-0012	110379	Tie-Cable
89		551648	Decal — Caution
90		551655	Decal - Tine Warning
91		551689	Decal - Tine Engagement
92		551713	Decal - Hand Placement
93		551846	Decal - Caution Disengage
94		550574	Decal - Handle Panel
		541078	Owner's Handbook

OPTIONAL ACCESSORY

95	1076-0056	465856	Furrowing Kit