ITEM NO. 629_1068 REV P01

REVISIONS				
REV	ZONE	DESCRIPTION	DATE	BY
P00		RELEASED FOR PRODUCTION	02/05/2001	GUINAUGH
		UPDATE DRAWING TO MATCH PART		
P01		ADDED 6" TAPE NOTE; ECO 10812	08/26/2002	JKRONE

BILL OF MATERIAL

ITEM	PART NUMBER	QUANTITY	DESCRIPTION
01	2-520263-2	1	TERM: AMP: 250 SERIES FASTON: INSULATED
02	02984683	1	CONN: PED: 2 WAY: CAP
02	02965481	1	TERM: PED: 56 SERIES: BLADE
03	1-480318-0	1	CONN: AMP: 2 WAY: PLUG
03	61117-1	2	TERM: AMP: SOCKET
04	1-480319-0	1	CONN: AMP: 2 WAY: CAP
04	61118-1	2	TERM: AMP: .084 DIAMETER PIN
05	1-480350-0	1	CONN: AMP: 1 WAY: CAP
05	61118-1	1	TERM: AMP: .084 DIAMETER PIN
06	1-480319-0	1	CONN: AMP: 2 WAY: CAP
06	61118-1	2	TERM: AMP: .084 DIAMETER PIN
07	52041-9	1	TERM: AMP: 1/4" RING: INSULATED
08	729-0357	1	CONN: CASE: FUSE HOLDER WITH CLIP
08	12020321	1	TERM: PED: 1F PACON III: 14 GAUGE
08	12020334	1	TERM: PED: PACON III: 18 GAUGE
09	972311	1	CONN: DELTA: 7 WAY
09	640417-1	1	TERM: AMP: .250 BLADE RECEPTACLE: 14 GAUGE
09	640841-1	6	TERM: AMP: .250 BLADE RECEPTACLE: 18 GAUGE
10	3-3344-885-046	1	CONN: JULIANA: 5 WAY: PLUG
10	2631131011	3	TERM: GROTE & HARTMAN: .187 FASTON TYPE
10	42281-1	2	TERM: AMP: .250 FASTON: UNINSULATED
11	972305	1	CONN: DELTA: 8 WAY: PLUG
11	640841-1	5	TERM: AMP: .250 BLADE RECEPTACLE: 18 GAUGE
11	640417-1	1	TERM: AMP: .250 RECEPTACLE: 14 GAUGE
12	2-520263-2	1	TERM: AMP: .250 SERIES FASTON: INSULATED
13	9106720208	1	CONN: LIGHTING COMPONENTS: 2 WAY: WEDGE BASE: LAMP
13	7805321000	2	TERM: LIGHTING COMPONENTS: WEDGE BASE: LAMP
14	9106720208	1	CONN: LIGHTING COMPONENTS: 2 WAY: WEDGE BASE: LAMP
14	7805321000	2	TERM: LIGHTING COMPONENTS: WEDGE BASE: LAMP
15	9106720208	1	CONN: LIGHTING COMPONENTS: 2 WAY: WEDGE BASE: LAMP
15	7805321000	2	TERM: LIGHTING COMPONENTS: WEDGE BASE: LAMP
16	2-520261-2	1	TERM: AMP: .187 SERIES FASTON: INSULATED
17	02973422	1	CONN: PED: 5 WAY: 56 SERIES
17	640841-1	4	TERM: AMP: .250 BLADE RECEPTACLE: 18 GAUGE
18	2-520263-2	1	TERM: AMP: .250 SERIES FASTON: INSULATED
19	2-520263-2	1	TERM: AMP: .250 SERIES FASTON: INSULATED
20	2-520263-2	1	TERM: AMP: .250 SERIES FASTON: INSULATED
21	AD-0628-1	1	TERM: FCI: 1/4" RING: BRASS
22	52041-9	1	TERM: AMP: 1/4" RING: INSULATED
23	729-0357	1	CONN: CASE: FUSE HOLDER WITH CLIP
23	12020321	1	TERM: PED: PACON III: 14 GAUGE
23	12020334	1	TERM: PED: PACON III: 18 GAUGE
24	60700-3	1	TERM: AMP: 1/4" RING: BRASS
25	2-520263-2	1	TERM: AMP: .250 SERIES FASTON: INSULATED
26	52041-9	1	TERM: AMP: 1/4" RING: INSULATED
27	AD-0628-1	1	TERM: FCI: 1/4" RING: BRASS
28	444LBV02	1	BATTERY POST BOOT: CASE: RED
29	52041-9	1	TERM: AMP: 1/4" RING: INSULATED
C1	729-0359	1	HARNESS MOUNTING CLIP: P & M PLASTICS: TAPE ON CLIP
C2	08911294	1	HARNESS MOUNTING CLIP: PED: SNAP ON: 16MM ROSEBUD
C3	08911294	1	HARNESS MOUNTING CLIP: PED: SNAP ON: 16MM ROSEBUD
C4	08911294	1	HARNESS MOUNTING CLIP: PED: SNAP ON: 16MM ROSEBUD
C5	08911294	1	HARNESS MOUNTING CLIP: PED: SNAP ON: 16MM ROSEBUD
C6	08911294	1	HARNESS MOUNTING CLIP: PED: SNAP ON: 16MM ROSEBUD
N/A	257020	2	FUSE: BUSSMAN: 20 AMP: AUTOMOTIVE
N/A	8GPTXXX	8.95 FT	WIRE: INTERSTATE: 8 GAUGE: VARIOUS COLORS
N/A	14GPTXXX	7.52 FT	WIRE: INTERSTATE: 14 GAUGE: VARIOUS COLORS
N/A	18GPTXXX	68.60 FT	WIRE: INTERSTATE: 18 GUAGE: VARIOUS COLORS
N/A	R64499	2.15 FT	CONDUIT: M & Q: 8MM PP
N/A	R68238	1.86 FT	CONDUIT: M & Q: 16MM PP
N/A	R68239	4.61 FT	CONDUIT: M & Q: 16MM PE
N/A	PT3420	1.67 FT	TAPE: POLYKEN: SPLICE CLIP TAPE
N/A	PM002147-001	25 FT	TAPE: ELLIOT GROUP: 1 1/4" BLK VINYL: HARNESS COVERING
N/A	AT0320	2 FT	TAPE: AMERICAN TAPE: TEAR TAPE
N/A	485043-1	3	TERM: AMP: SPLICE CLIP
N/A	53625-1	2	TERM: AMP: SPLICE CLIP
N/A	729-0198	1	HEAT SHRINK TUBING: GRAYLINE: 1/2" X 1": 105C
N/A	CM1-12V	1	RELAY: AROMAT: 12 VOLT

Conditions as shown	
ITEM	DESCRIPTION
1	KEY SWITCH OFF
2	PTO OFF
3	TRACTOR UNOCCUPIED
4	BRAKE SWITCH OFF

Pre-Approved Bill of Material Deviations		
Primary Part Number	Alternate Part Number	Alternate Part Description
52041-9	AD-0628-1	TERM: FCI: 1/4" RING: BRASS W/ 729-0198
52041-9	FN56TOR	TERM: HOFFMAN: 1/4" RING: INSULATED
60700-3	61867-2	TERM: AMP: 1/4" RING: TIN PLATED BRASS
PM002147-001	PM002148-001	Alternate Part Description
08911294	729-0359	HARNESS MOUNTING CLIP: P & M PLASTICS: TAPE ON CLIP
R68239	R68430	CONDUIT: M & Q: 16MM PP
R68239	R68238	CONDUIT: M & Q: 16MM PA
R64499	R64498	CONDUIT: M & Q: 8MM PA
PM002147-001	PM002148-001	TAPE: ELLIOT GROUP: 1/2" BLK VINYL: HARNESS COVERING
14GPTXXX	14GPTXXX	WIRE: INTERSTATE: 14 GAUGE: VARIOUS COLORS
18GPTXXX	18GPTXXX	WIRE: INTERSTATE: 18 GUAGE: VARIOUS COLORS

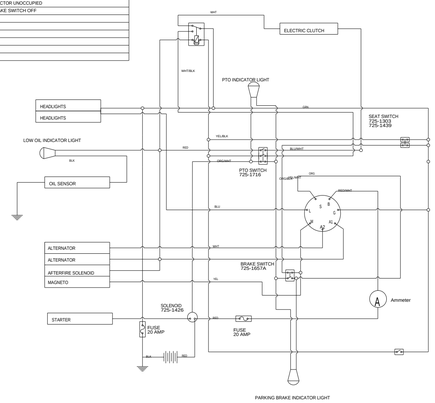

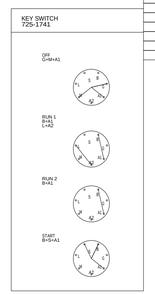

ITEM 09: KEY SWITCH		
CAV.	OR	CLR
A1	90D	RED
L	10B	GRN
L	20	BLU
A2	12D	WHT
S	80BC	ORG
B	98	RED/WHT
M	30C	YEL

ITEM 10: PTO RELAY		
CAV.	OR	CLR
1	50C	YEL/BLK
2	90C	RED
3	10G	GRN
4	12L	WHT
5	13D	WHT/BLK

ITEM 11: PTO SWITCH		
CAV.	OR	CLR
A	60BE	ORG/WHT
B	50D	YEL/BLK
C	90F	RED
N/A		
E	13D	WHT/BLK
F	14D	BLU/WHT
G	70C	ORG/BLK
H		
J		

ITEM 12: AMMETER OUTPUT		
CAV.	OR	CLR
N/A	97	RED/WHT

ITEM 13: PTO INDICATOR LIGHT		
CAV.	OR	CLR
1	70F	ORG/BLK
2	60E	ORG/WHT

ITEM 14: LOW OIL INDICATOR LIGHT		
CAV.	OR	CLR
1	90H	RED
2	12	BLK

ITEM 15: PARKING BRAKE INDICATOR LIGHT		
CAV.	OR	CLR
1	70G	ORG/BLK
2	80C	ORG

ITEM 16: AMMETER INPUT		
CAV.	OR	CLR
N/A	98	RED/WHT

ITEM 17: BRAKE SWITCH		
CAV.	OR	CLR
A	N/A	N/A
B	70D	ORG/BLK
C	40	YEL/WHT
D	80B	ORG
E	30B	YEL

ITEM 18: NO CUT IN REVERSE SWITCH		
CAV.	OR	CLR
N/A	50A	YEL/BLK

ITEM 19: SEAT SWITCH		
CAV.	OR	CLR
N/A	50B	YEL/BLK

ITEM 20: SEAT SWITCH		
CAV.	OR	CLR
N/A	40	YEL/WHT

ITEM 21: FRAME GROUND		
CAV.	OR	CLR
N/A	13/10J	BLK:GRN

ITEM 22: NEGATIVE BATTERY POST		
CAV.	OR	CLR
N/A	13	BLK

ITEM 23: FUSE GROUND CIRCUIT		
CAV.	OR	CLR
A	10H	GRN
B	10J	GRN

ITEM 24: STARTER SOLENOID GROUND		
CAV.	OR	CLR
N/A	10F	GRN

ITEM 25: STARTER SOLENOID ENERGIZER		
CAV.	OR	CLR
N/A	60B	ORG/WHT

ITEM 26: STARTER CABLE/STARTER SOLENOID		
CAV.	OR	CLR
N/A	93	RED

ITEM 27: STARTER SOLENOID/BATTERY CABLE		
CAV.	OR	CLR
N/A	92/94	RED:RED

ITEM 29: POSITIVE BATTERY POST		
CAV.	OR	CLR
N/A	94	RED

ITEM 07: STARTER CABLE/STARTER		
CAV.	OR	CLR
N/A	93	RED

ITEM 08: FUSE: POWER CIRCUIT		
CAV.	OR	CLR
A	87	RED/WHT
B	92	RED

ITEM 06: HEAD LIGHTS		
CAV.	OR	CLR
1	10A	GRN
2	20	BLU

ITEM 05: MAGNETO		
CAV.	OR	CLR
1	30F	YEL

ITEM 04: MAGNETO & AFTERFIRE SOLENOID		
CAV.	OR	CLR
1	30A	YEL
2	96A	RED

ITEM 03: AC & DC ALTERNATOR		
CAV.	OR	CLR
1	90B	RED/BLK
2	120	WHT

ITEM 02: PTO ELECTRIC CLUTCH		
CAV.	OR	CLR
A	140	BLU/WHT
B	121	WHT

ITEM 01: OIL PRESSURE SWITCH		
CAV.	OR	CLR
N/A	12	BLK

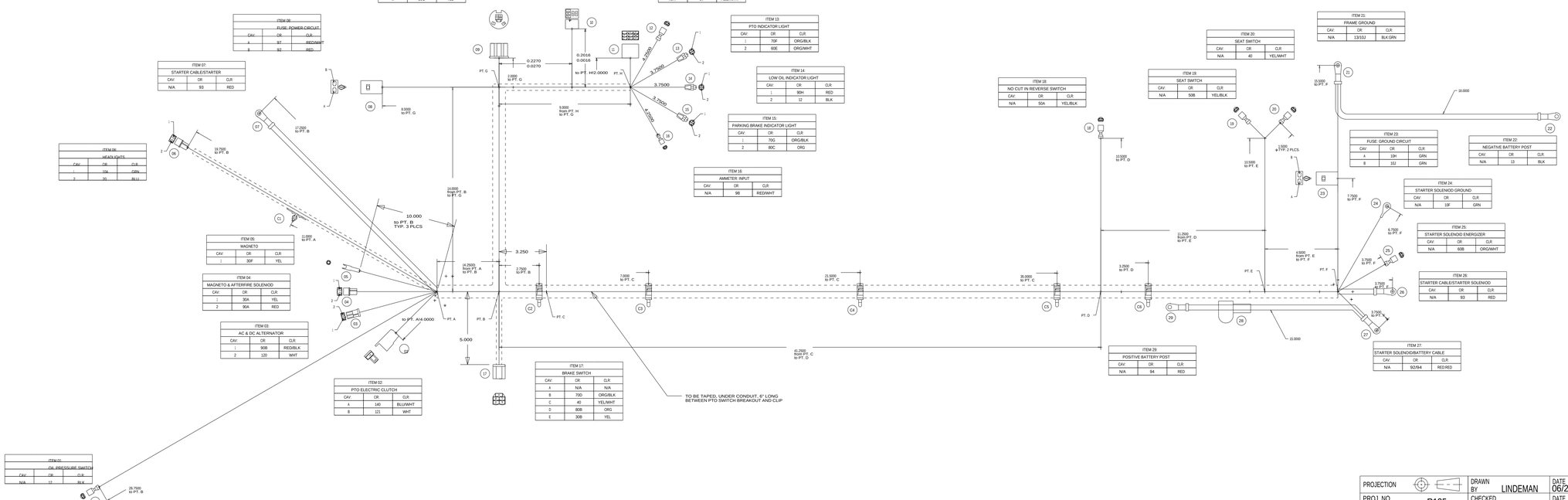

PROJECTION	DRAWN BY LINDEMAN	DATE 06/26/2000	MTD Products INC P.O. BOX 368022 CLEVELAND, OH 44136-0015
PROJ. NO. R125	CHECKED BY	DATE	ITEM DESCRIPTION: HARN ASM:RT-99:KH DIGMTR
SIMILAR PART	APPR. BY J. Kasanic	DATE 08/26/2002	
	MATERIAL ----		SIZE D / ITEM NO. 629_1068 / REV P01
	FINISH ----		SCALE 1/1 / FILE / EST.WT. 0.000 Lb / SHEET 1 OF 1

This document contains proprietary information and is the property of MTD Products Inc. Consumer Products Group. The reproduction, distribution and utilization of this document as well as communication of its content to others without our express authorization by MTD Products Inc., Consumer Product Group is prohibited.