3 HP Chain Drive Tiller
WT3D

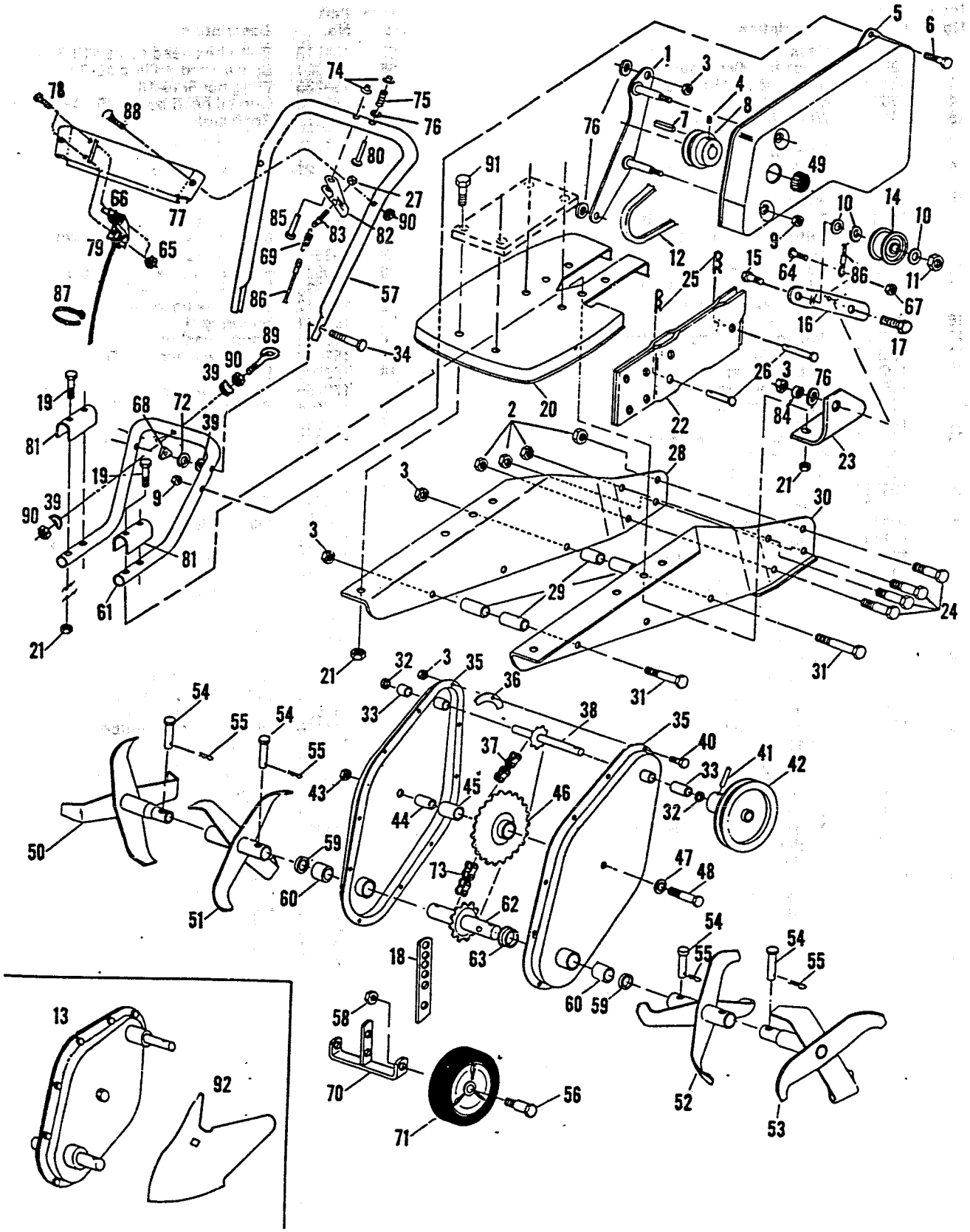

Ref. No.	Part No.	Description
1	463687	Plate-Belt Guide
2	452193	Nut - Hex 5/16-18 Whiz
3	715508	Nut - Hex 1/4-20 Lock
4	458844	Set Screw - Pulley
5	571166	Belt Guard Assembly
6	450072	Bolt - Hex 1/4-20 x 1-1/2
7	446369	Key - 3/16 Sq. x 1-1/4
8	420935	Pulley - Engine
9	715078	Nut -Hex 1/4-20 Whiz
10	461731	Washer - Idler Pulley
11	715524	Nut - Hex 3/8-16 Lock
12	421321	Belt - Drive
13	432427	Transmission Assembly
14	420745	Pulley - Idler
15	715326	Bolt - Hex 3/8-16 x 1
16	779165	Arm - Idler
17	715045	Bolt - Hex 1/4-20 x 3/4
18	435289	Bar - Depth
19	460311	Bolt - Hex 5/16-18 x 1-3/4
20	571174	Hood - Tine
21	715490	Nut - Hex 5/16-18 Lock
22	771576	Bracket - Depth Bar
23	771386	Bracket - Idler Mtg.
24	459131	Bolt - Hex 5/16-18 x 1 Whiz
25	715011	Hairpin Cotter
26	489823	Pin - Clevis 3/8 x 1-5/8
27	452615	Nut - Hex 1/4-20 Nylok
28	446997	Beam - Main Support R. H.
29	468256	Spacer - Beam
30	446971	Beam - Main Support L. H.
31	150433	Bolt - Hex 1/4-20 x 2
32	774760	Seal - Input Shaft
33	423608	Bearing - Input Shaft
34	459727	Bolt - Curved Head 5/16-18 x 2-1/4
35	590026	Transmission-Half w/Bearings
36	762039	Gasket - Transmission Housing
37	425389	Chain - Roller, No. 42
38	417691	Shaft-Input w/Sprocket
39	150201	Washer - Curved
40	715052	Bolt - Hex 1/4-20 x 1/2
41	715193	Pin - Roll 3/16 x 1-1/4
42	419689	Pulley Assembly
43	715441	Nut - Hex 3/8-16 Whiz
44	432971	Sleeve - Bearing
45	423624	Bearing - Center Hub
46	434829	Sprocket & Hub Assembly
47	461780	Washer - 3/8 T-Lock
48	459032	Bolt - Hex 3/8-16 x 2-1/4
49	781625	Cup - Shaft Cover
50	786640	Tine & Hub Assembly - R.H. Outer
51	786582	Tine & Hub Assembly - R.H. Outer
52	786558	Tine & Hub Assembly - L.H. Inner
53	786616	Tine & Hub Assembly - L.H. Outer
54	488965	Pin - Clevis 5/16 x 1-1/4
55	490011	Hairpin Cotter
56	153668	Bolt - Wheel
57	731554	Handle
58	715086	Nut - Hex 3/8-16 Lock
59	774737	Seal - Output Shaft
60	423632	Bearing - Output Shaft
61	763284	Yoke - Handle
62	417725	Shaft - Output w/Sprocket
63	468249	Spacer - Tine Shaft
64	459248	Screw - Truss Hd 10-24 x 1/2
65	715334	Nut - Hex 10-24 Keps
66	744037	Knob - Throttle Control
67	451443	Nut - Hex 10-24 Lock
68	744284	Knob - Handle Retainer
69	775437	Spring - Control Cable
70	771600	Bracket Assembly - Wheel
71	498634	Wheel - 8"
72	461665	Washer - Lock 5/16
73	425397	Chain - Roller, No.420
74	452128	Palnut - 1/4" Dia.
75	775130	Spring - Latch
76	460923	Washer - 1/4" Dia.
77	571158	Panel - Handle
78	458687	Screw - Hex 10-24 x 1/2
79	780296	Control - Throttle w/Cable
80	489013	Pin - Clevis 1/4" Dia. x 1-3/4
81	432963	Sleeve - Yoke Mounting
82	731695	Lever - Control
83	450478	Bolt - Spade 1/4-20 x 3/4
84	468728	Spacer - Idler Arm
85	489005	Pin - Clevis 1/4" x 1-1/2
86	749176	Cable - Idler Control
87	110379	Cable Tie
88	151126	Bolt - Carriage 1/4-20 x 1-1/2
89	152371	Eyebolt - Cable Guide
90	715037	Nut - Hex 1/4-20 Keps
91	150250	Bolt - Hex 5/16-18 x 1-1/2

OPTIONAL ACCESSORY

92	465856	Furrowing Kit