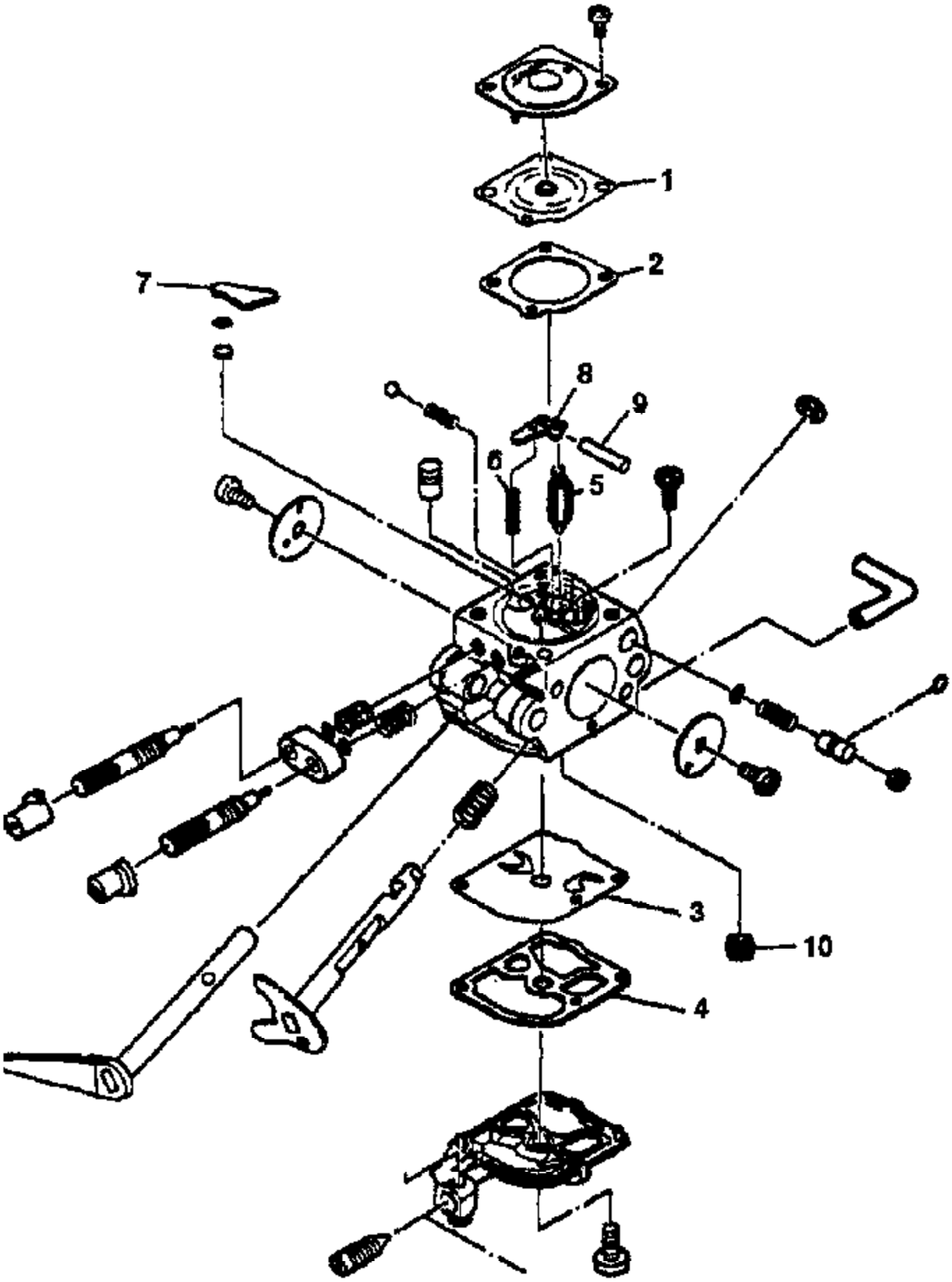
1
2
7
8
9
6
5
3
10
4

Ref #	Part Number	Qty	Description
	A03904	1	Gasket/Diaphragm Kit Included items 1 - 4
	A01375	1	Repair Kit Included items 1 - 10
1		1	Included in Repair Kit P/N A03904 & Gasket/Diagram Kit P/N A01375
2		1	Included in Repair Kit P/N A03904 & Gasket/Diagram Kit P/N A01375
3		1	Included in Repair Kit P/N A03904 & Gasket/Diagram Kit P/N A01375
4		1	Included in Repair Kit P/N A03904 & Gasket/Diagram Kit P/N A01375
5		1	Included in Repair Kit P/N A03904
6		1	Included in Repair Kit P/N A03904
7		1	Included in Repair Kit P/N A03904
8		1	Included in Repair Kit P/N A03904
9		1	Included in Repair Kit P/N A03904
10		1	Included in Repair Kit P/N A03904

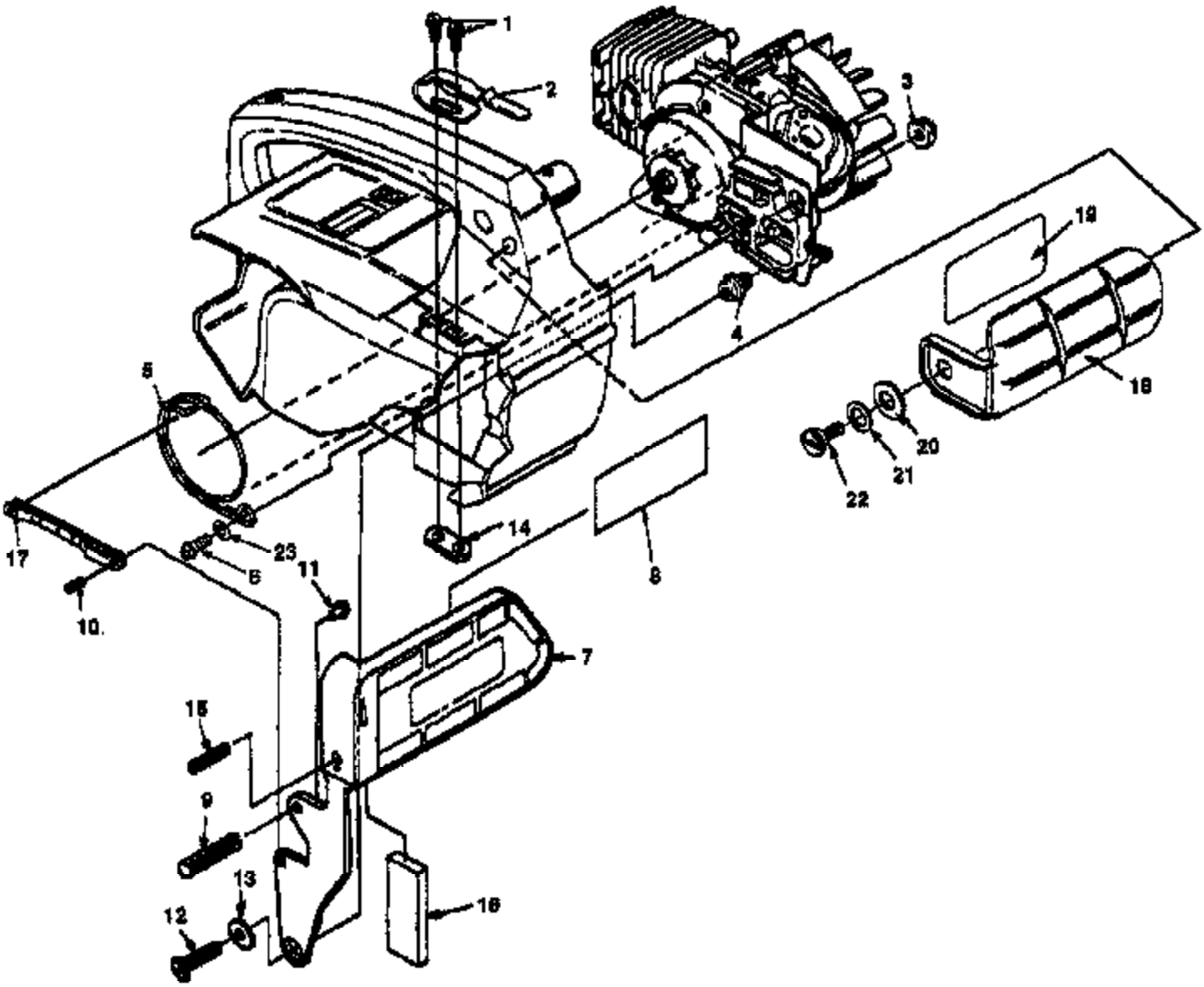
1
2
3
4
5
6
7
8
9
10
11
12
13
14
15
16
17
18
19
20
21
22
23

Ref #	Part Number	Qty	Description
1	88066	2	SCREW-Hex Hd. w/Washer (8-32 X 1/2")
2	02635	1	CLIP-Retaining
3	81124A	1	NUT-Hex, Jam
4	70636	1	POST-Chain Brake
5	70637C	1	BAND-Brake
6	82538	1	SCREW-Thread Form (10-24 x 3/4")
7	A03061A	1	HANDGUARD & LEVER (200, Super 2 SL)
8	02661	1	DECAL-Safety
9	JA461383	1	PIN-Roll (3/16 X 1")
10	95395A	1	PIN-Roll
11	82367	1	SCREW-Drive
12	82166	1	SCREW-Machine, Pan Hd. (10-32 X 1/2")
13	70632	1	WASHER-Flat
14	02637	1	NUT-Weld
15	JA461361	1	PIN-Roll
16	02462	1	WEIGHT-Handle (International Only)
17	A70767	1	PIVOT-Link
18	A70796C	1	HANDGUARD KIT (Super 2, XL, 180 & 192)
19	02661	1	DECAL-Handguard
20	95694	1	WASHER-Curve Spring
21	96102	1	WASHER-Flat
22	95714	1	SCREW-Shoulder
23	84008	1	WASHER- Flat (#10)

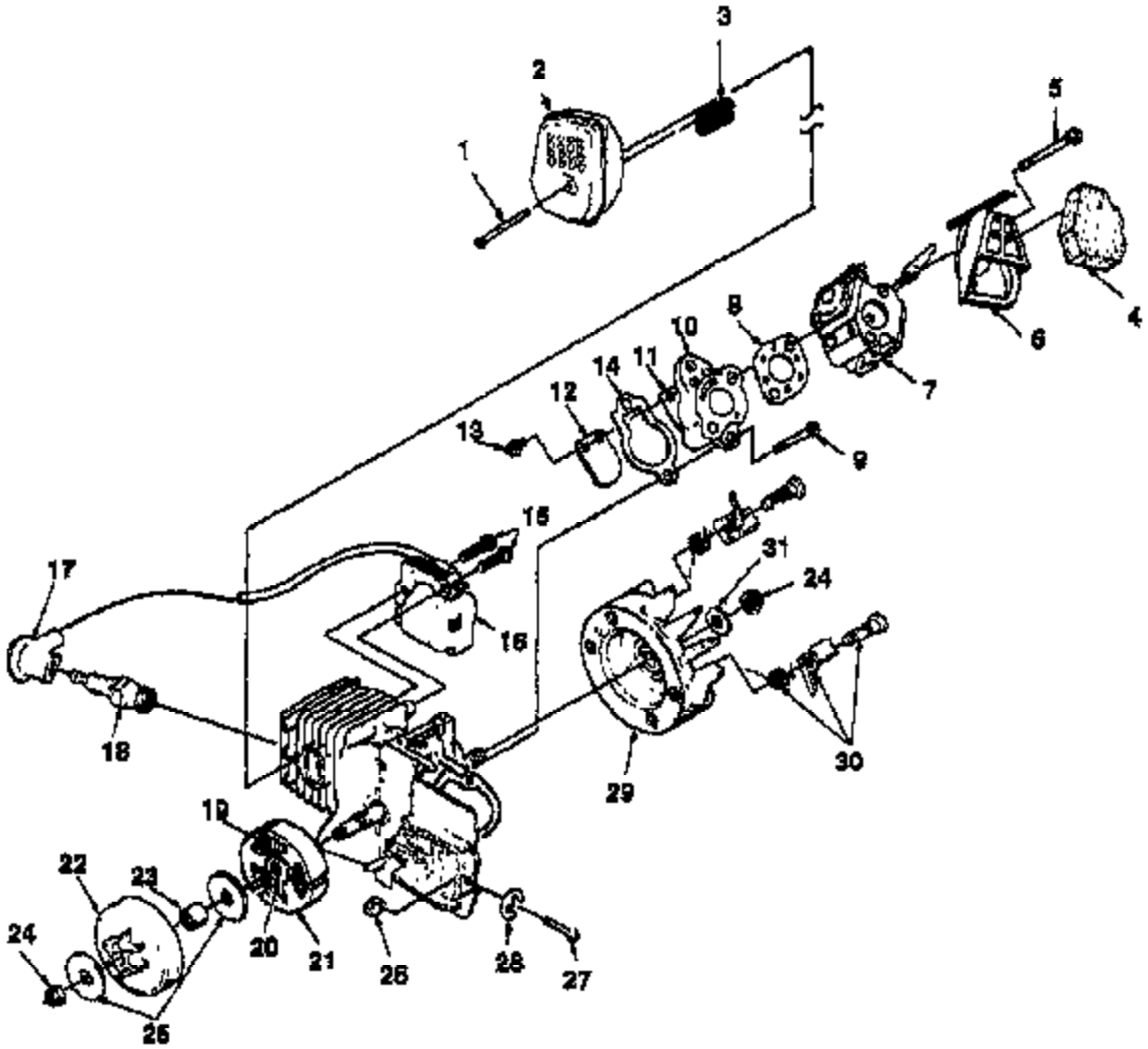
1
2
3
4
5
6
7
8
9
10
11
12
13
14
15
16
17
18
19
20
21
22
23
24
25
26
27
28
29
30
31
24

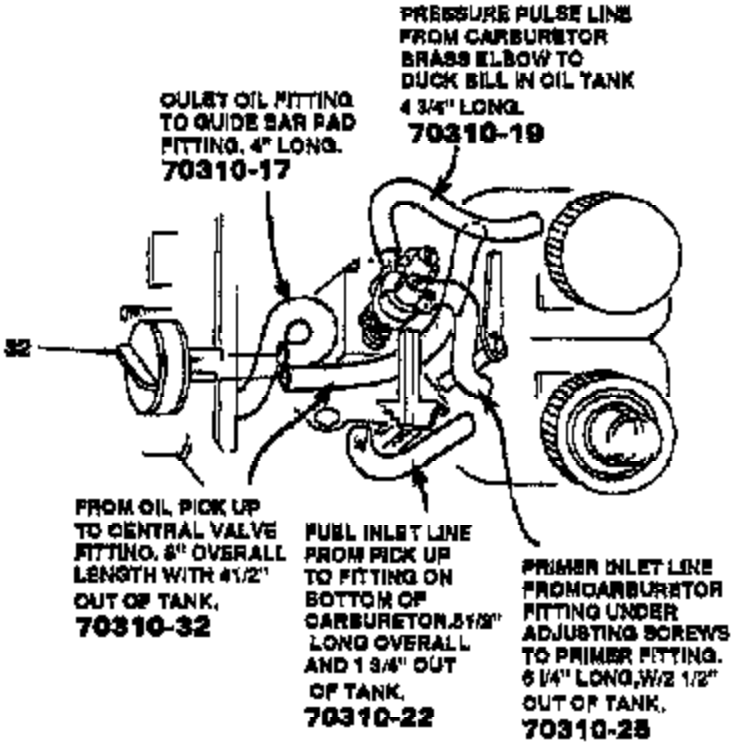
PRESSURE PULSE LINE FROM CARBURETOR BRASS ELBOW TO DUCK BILL IN OIL TANK 4 3/4" LONG.
70310-19
OULET OIL FITTING TO GUIDE BAR PAD FITTING. 4" LONG.
70310-17
32
FROM OIL PICK UP TO CENTRAL VALVE FITTING. 8" OVERALL LENGTH WITH 4 1/2" OUT OF TANK.
70310-32
FUEL INLET LINE FROM PICK UP TO FITTING ON BOTTOM OF CARBURETOR.5 1/2" LONG OVERALL AND 1 3/4" OUT OF TANK.
70310-22
PRIMER INLET LINE FROMCARBURETOR FITTING UNDER ADJUSTING SCREWS TO PRIMER FITTING. 6 1/4" LONG,W/2 1/2" OUT OF TANK.
70310-25

Ref #	Part Number	Qty	Description
1	93460	1	SCREW-Machine Hex Sems (#8 -32 X 3/4")
2	A02459	1	MUFFLER
3	02458	1	SCREEN-Spark Arrestor
4	02500	1	FILTER-Air
5	00167	2	SCREW-Thread Forming
6	02491A	1	BOX-Air Filter
7	A01373	1	CARBURETOR (Zama)
8	02488	1	GASKET-Carburetor
9	82589	2	SCREW-Plastite, (10-14 X 1")
10	A02499	1	HEAT DAM
11	95983	1	REED
12	03205	1	STOP-Reed
13	82498	2	SCREW-Hex Taptite (4-40 X 3/8")
14	02453	1	GASKET-Intake Manifold
15	82540	2	SCREW-Thread Forming (8-32 X 1")
16	94711CS	1	MODULE-Ignition
17	A33055	1	TERMINAL
18	96169S	1	SPARK PLUG (Champion DJ7Y)
	79252	1	SPARK PLUG (Champion RDJ7Y)
19	03961	3	SPRING-Clutch
20	79221	1	SPIDER-Clutch
21	79222A	3	SHOE-Clutch
22	A95653C	1	SPROCKET & DRUM
23	70277	1	BEARING
24	81229	2	NUT-Rotor (5/16-24)
25	95299	2	WASHER-Thrust
26	692542	1	PIN-Adjusting
27	A00440	1	SCREW & E-RING KIT
28	93574	1	E-RING
29	A04158	1	ROTOR & STARTER PAWL
30	A70285E	1	STARTER PAWL KIT
31	84065	1	WASHER-(5/16")
32	A01147	1	OIL VALVE

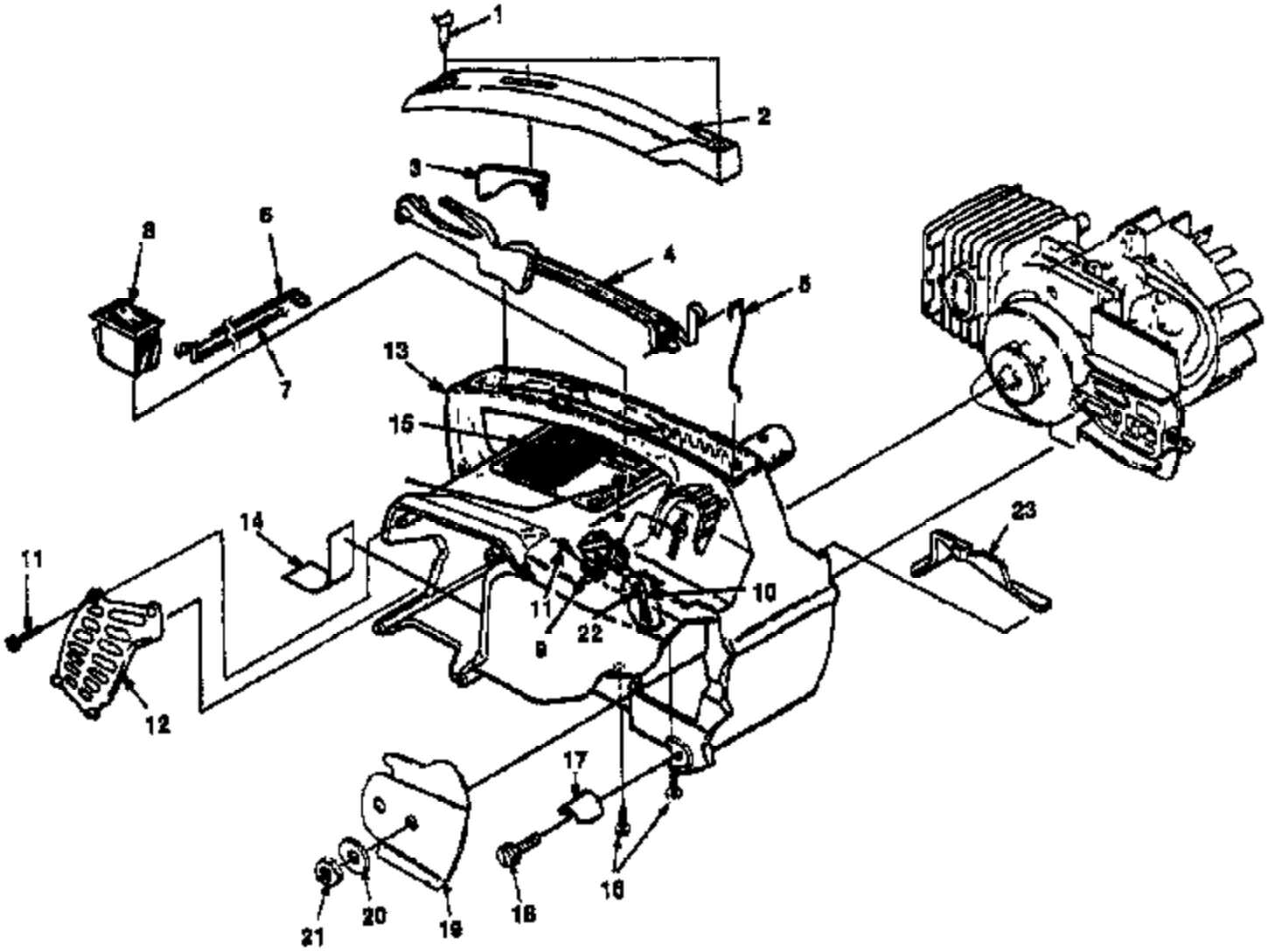
1
2
3
4
5
6
7
8
9
10
11
12
13
14
15
16
17
18
19
20
21
22
23

Ref #	Part Number	Qty	Description
1	94065	2	SCREW-Pan, plastite (#10-16 X 3/4")
2	02495	1	COVER-Handle
3	02493	1	LOCK-Trigger
4	02492A	1	TRIGGER
5	02501	1	ROD-Throttle
6	A02482	1	LEAD-w/Flag Term.
7	A02434	1	LEAD-w/Ring Term.
8	02491	1	SWITCH
9	A01147	1	OIL VALVE
10	7031017		TUBING-Rubber (4 1/4")
11	82528	5	SCREW-Pan plastite (#6 X 3/8")
12	02765	1	SHIELD-Muffler
13	A01232	1	HOUSING-Engine
14	95615	2	TAPE
15	02490A	1	DECAL-Warning
16	82538	4	SCREW-Torx, taptite (10-24 X 3/4")
17	95212	1	STOP-Chain
18	82563	1	SCREW-Torx, plastite (#10 X 3/4")
19	69360A	1	PLATE-Guide Bar
20	69309A	1	WASHER-Flat
21	810652	1	NUT-Hex
22	7031032	1	TUBING Rubber (8")
23	02481	1	COVER- Air Filter

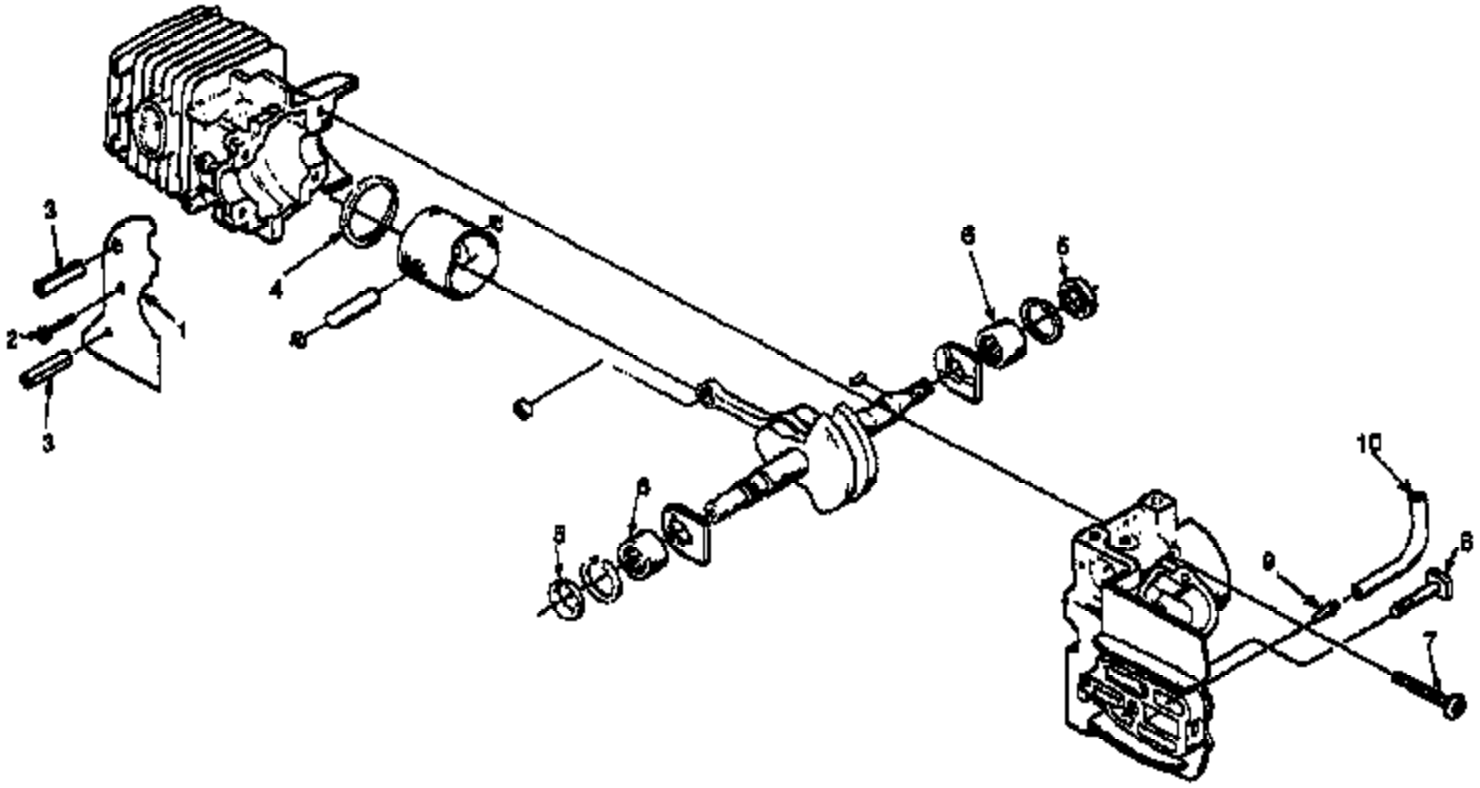
3
2
3
1
4
2
6
5
10
8
9
7

Ref #	Part Number	Qty	Description
1	02639	1	SAW DUST SHIELD
2	93932	1	SCREW- Tapping (#6-32 x 5/16")
3	70763	2	PIN- Roll (5/32 x 1 1/8") (Brake Model Only)
	A001321	1	SHORT BLOCK (XL, 180)
4	93165	1	RING- Piston
5	94638	2	SEAL- Shaft
6	12530	2	BEARING- Needle
7	82567	4	SCREW- Torx Pan Hd. (10-24 x 1 1/8")
8	69195	1	BOLT-Guide Bar
9	94619	1	FITTING- Tube
	A01105	1	SHORT BLOCK (192, Super 2, 200, Super 2 SL))
	93165	1	RING-Piston
	94638	2	SEAL- Shaft
	12530	2	BEARING- Needle
	82567	4	SCREW- Torx Pan Hd. (10-24 x 1 1/8")
	69195	1	BOLT- Guide Bar
	94619	1	FITTING- Tube
10	7031017	1	TUBING- Rubber (Oil Line) (4 1/4")
	7031099	1	TUBING- Rubber (Oil Line) (10 Ft. Length)

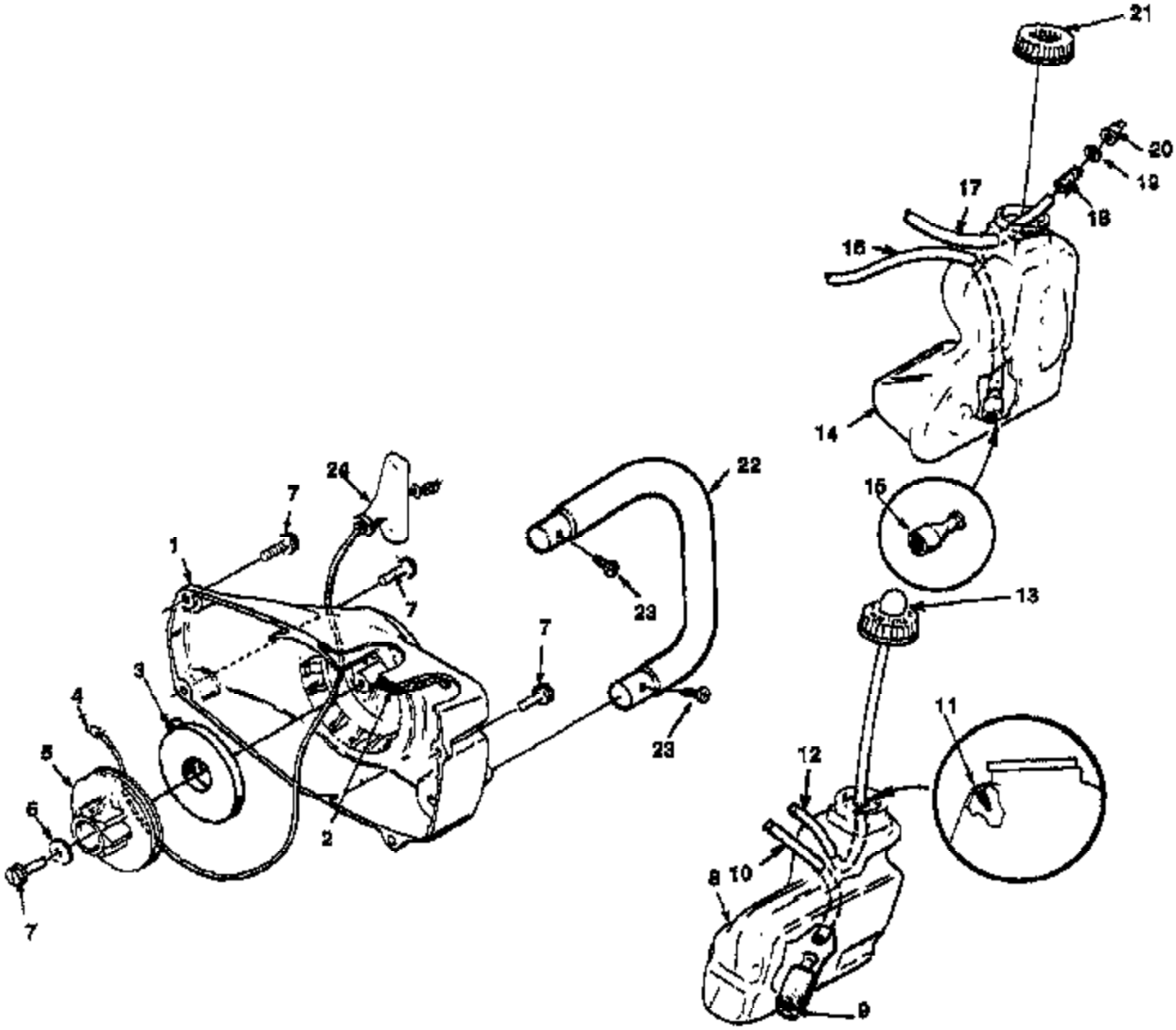
21
20
19
18
17
16
14
15
13
11
12
8
10
9
24
7
1
7
7
22
23
23
3
4
5
6
2
7

Ref #	Part Number	Qty	Description
1	A02562B	1	STARTER HOUSING ASSY.
2	69443	1	FILTER
3	A97908	1	SPRING & CONTAINER
4	9789901	1	ROPE-Starter (46")
	98052A	1	ROPE- Starter (250 Ft. Reel)
5	97768A	1	PULLEY Starter
6	94062	1	WASHER-Retaining
7	82563	5	SCREW-Torx (#10 x 3/4")
8	A027641	1	FUEL TANK
9	49422	1	FILTER- Fuel
10	7031022	1	LINE-Fuel (5 1/2")
11	08819	1	VALVE-Check
12	7031025	1	TUBING-Return 6 1/4"
	7031099	1	TUBING- Rubber (10 Ft. Length)
13	A01372A	1	PRIMER & CAP
14	A027631	1	OIL TANK
15	A68593	1	FINDER-Oil
16	7031032	1	TUBING-Rubber (8")
17	7031019	1	TUBING-Rubber (4 3/4")
18	69659B	1	FITTING-Oil
19	83004	1	WASHER- Lock
20	98819	1	VALVE-Check
21	A97230A	1	OIL CAP
22	02496	1	HANDLE BAR
23	94065	2	SCREW- Pan Plastite (#10-16 x 3/4")
24	02264	1	GRIP-Starter