PARTS LIST NO. 530164157		Poulan PRO PARTS LIST	Blower Model(s): BVM 215
DATE 11/19/03	NEW	**Note:** Illustration may differ from actual model due to design changes	Page 1

⚠ WARNING
All repairs, adjustments and maintenance not described in the Operator's Manual must be performed by qualified service personnel.

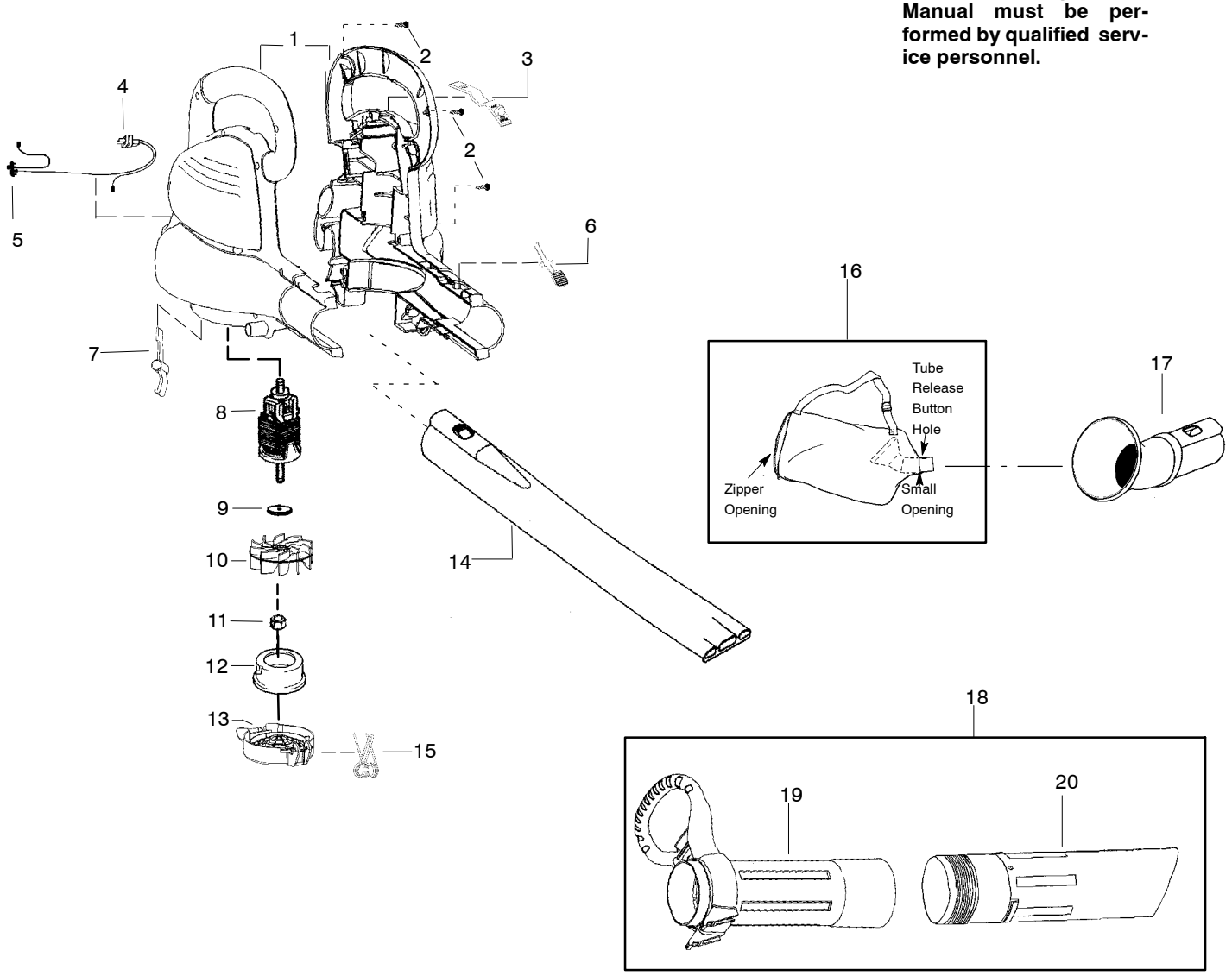

Ref.	Part No.	Description	Ref.	Part No.	Description
1.	530404289	Housing Set (incl. #6)	14.	530403765	Tube - Blower
2.	530016120	Screw	15.	530403833	Spring - Door
3.	530403764	Cover - Switch	16.	530095599	Assy. - Vac Bag
4.	530403778	Assy. Wiring Harness (incl. switch)	17.	530403769	Tube - Elbow
5.	530401094	Switch	18.	530403989	Kit-Upper/Lower Tube w/handle
6.	530403775	Button - Tube Latch	19.	530403842	Tube - Upper Vac w/handle
7.	530403790	Button - Door Latch	20.	530403850	Tube - Lower Vac
8.	530403770	Assy. Motor			
9.	530403834	Washer			
10.	530403771	Impeller	Not Shown		
11.	530403776	Nut - Impeller			
12.	530403791	Restrictor - Inlet		530164107	Manual - Operator's
13.	530403788	Door - Vacuum Inlet		530058965	Decal - Warning

✓ = NEW PART NUMBER FOR THIS IPL

★ = REFER TO THE SERVICE REFERENCE INDICATED FOR MORE INFORMATION. (LOCATED AT END OF IPL)